ROHS COMPLIANT REACH

Core Fit Reference			
0371		EI-35	EI-37
		Metric	American

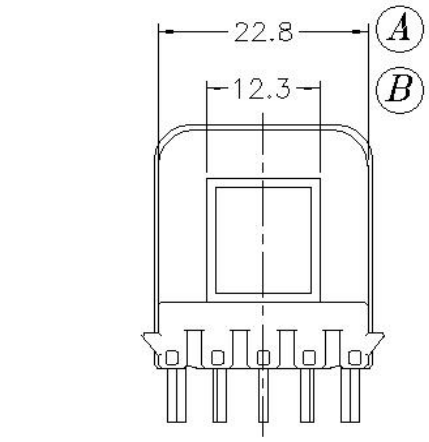

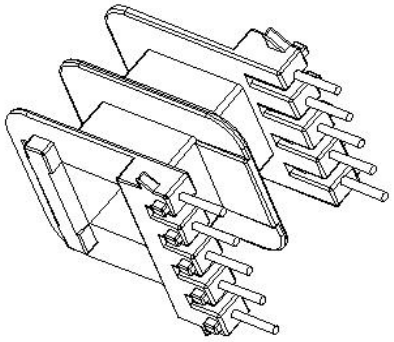

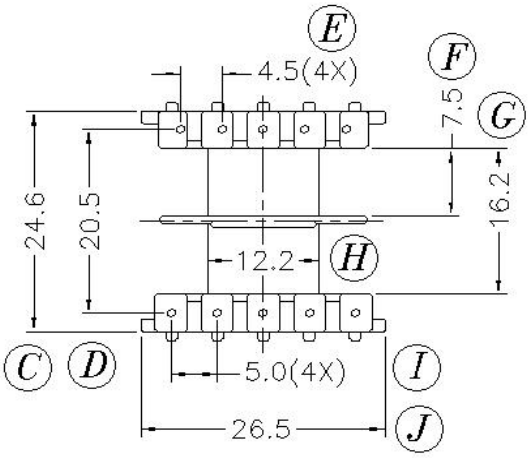

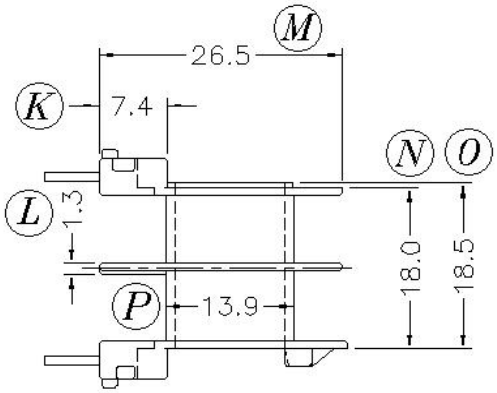

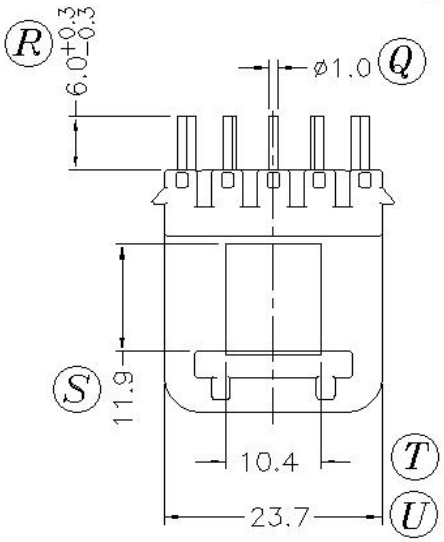

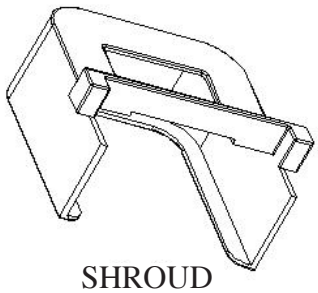

SHROUD

Scale	Tolerance (mm)			Terminal Plating	Terminal Material	No of Terminals
None	0-4mm +/-0.1	4-16mm +/-0.2	16-60mm +/-0.3	100% Sn	CP Wire	10

Molding Material	UL File No.	Rating	Class
PBT	E59481	UL94-V0	B

LODESTONE PACIFIC
NJD
CHINA FACTORY
www.lodestonepacific.com

Bobbin Part Number	Rev No
B-EIM35X11H-10-2-PBT-S	1