ROHS COMPLIANT REACH

Core Fit Reference			
1016		EI-28	EI-25
		Metric	American

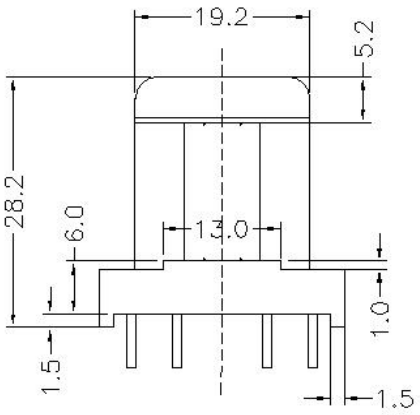

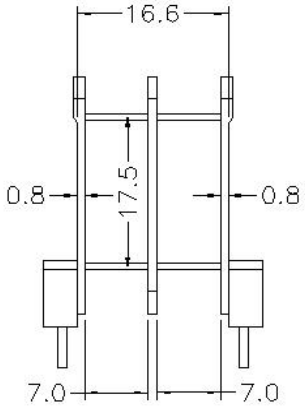

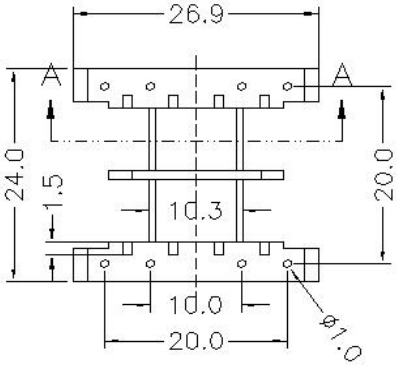

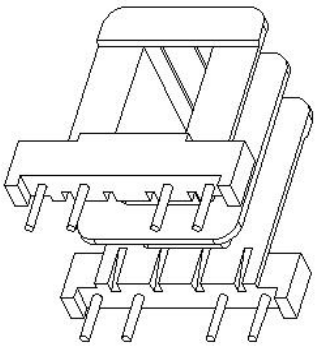

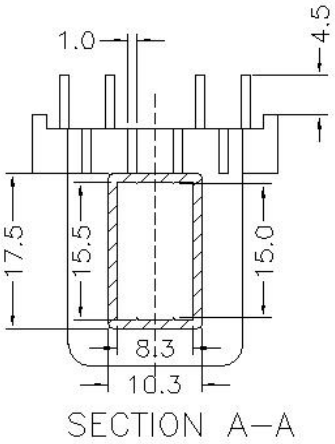

SECTION A–A

Scale	Tolerance (mm)		
None	0-4mm +/-0.1	4-16mm +/-0.2	16-60mm +/-0.3

Terminal Plating	Terminal Material	No of Terminals	
100% Sn	CP Wire	8	
Molding Material	**UL File No.**	**Rating**	**Class**
PBT	E59481	UL94-V0	B

LODESTONE PACIFIC
CHINA FACTORY
www.lodestonepacific.com

Bobbin Part Number — Rev No

B-EIM28X15-6H-8-2-PBT — 1