RoHS COMPLIANT REACH	Core Fit Reference			
	1244		EI-150	EI-175
			Metric	American

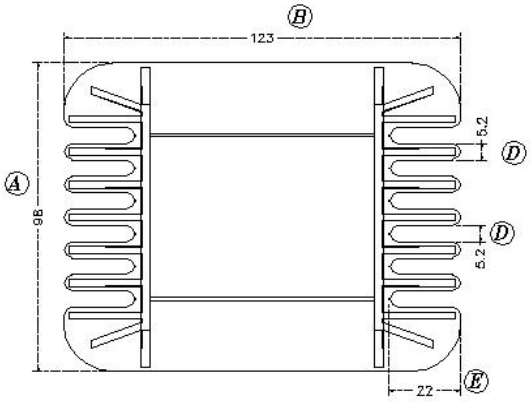

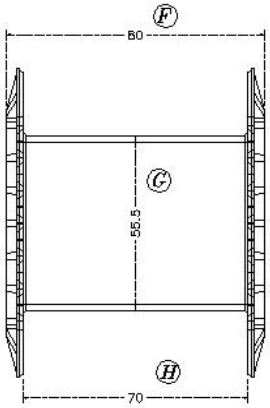

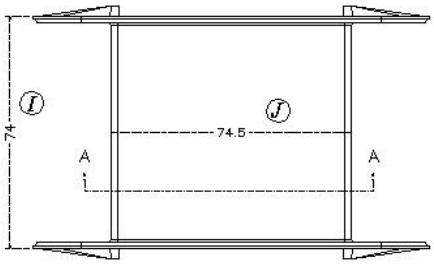

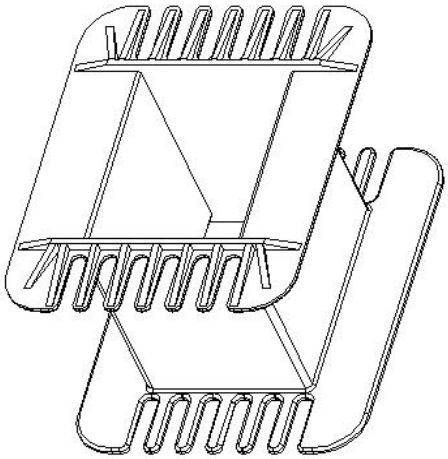

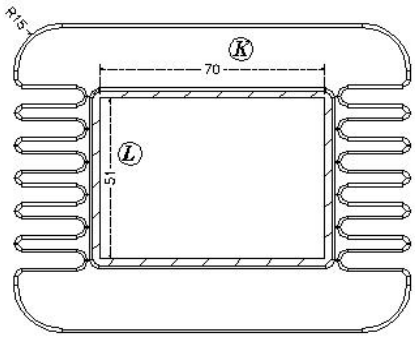

SECTION A–A

Scale	Tolerance (mm)			Terminal Plating	Terminal Material	No of Terminals
None	0-4mm +/-0.1	4-16mm +/-0.2	16-60mm +/-0.3	100% Sn	CP Wire	

Molding Material	UL File No.	Rating	Class
Vydyne 909	E70062	UL94-V0	F

Bobbin Part Number	Rev No
B-EIM150X70-1-GFN8	1

LODESTONE PACIFIC
NJD
CHINA FACTORY
www.lodestonepacific.com