ROHS COMPLIANT REACH	Core Fit Reference			
	1296			

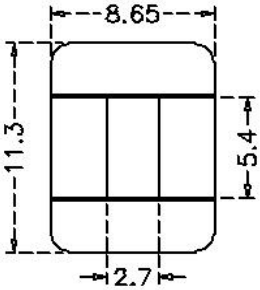

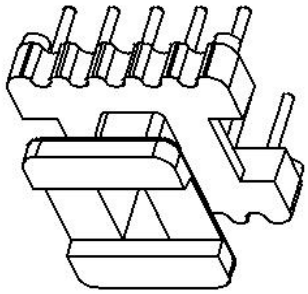

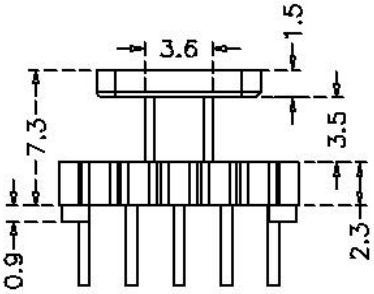

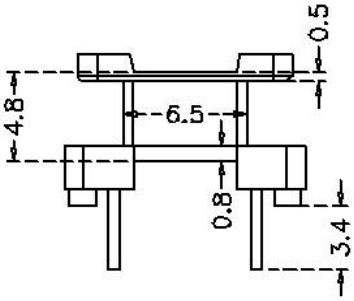

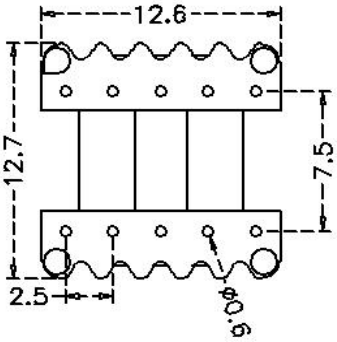

Scale	Tolerance (mm)			Terminal Plating	Terminal Material	No of Terminals
None	0-4mm +/-0.1	4-16mm +/-0.2	16-60mm +/-0.3	100% Sn	CP Wire	10

Molding Material	UL File No.	Rating	Class
PM-9820	E41429	UL94-V0	N

Bobbin Part Number	Rev No
B-EI12.5V-10-1-PH2	1

LODESTONE PACIFIC
NJD
CHINA FACTORY
www.lodestonepacific.com