ROHS COMPLIANT REACH	Core Fit Reference			
	1230			

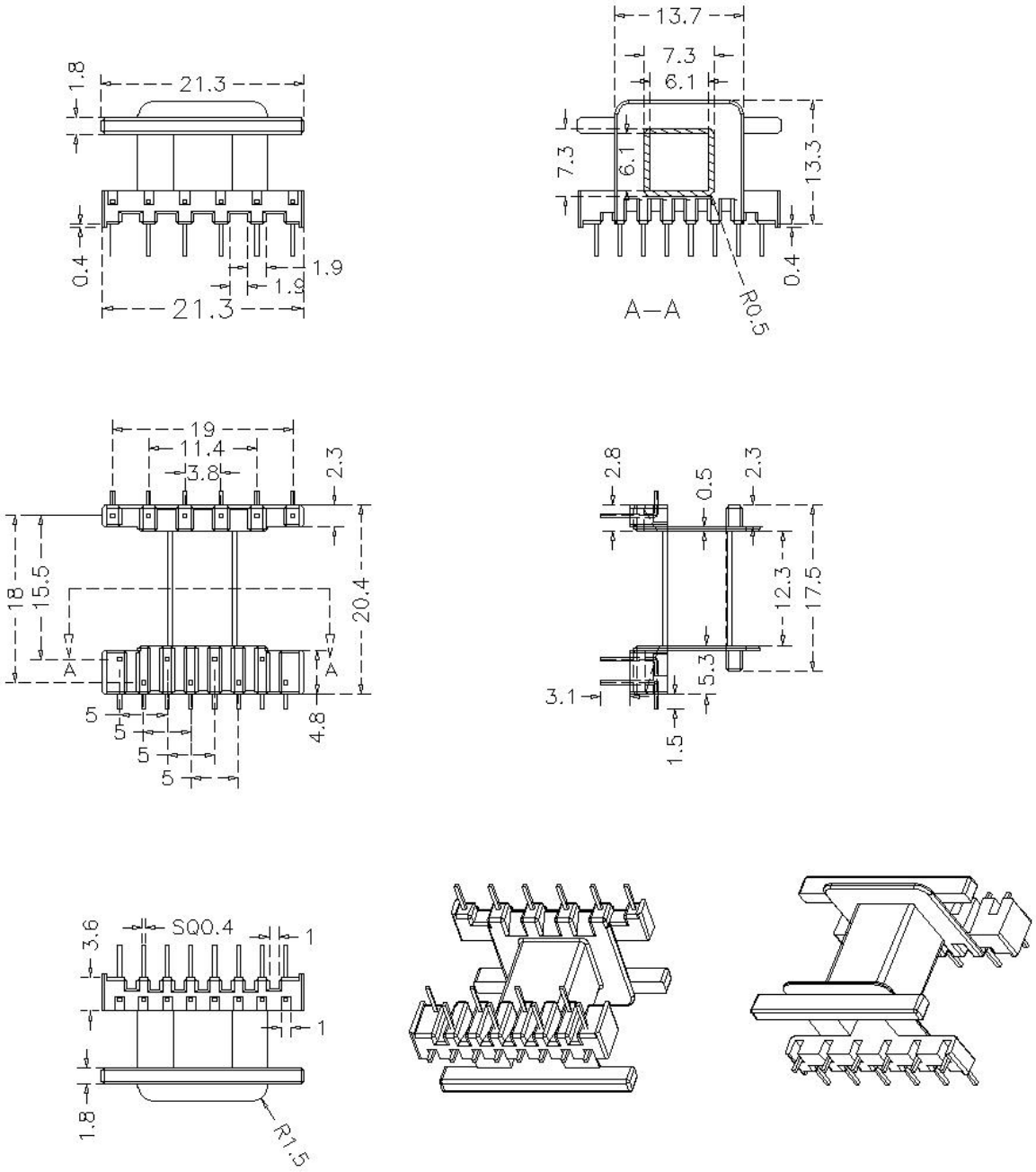

Scale	Tolerance (mm)			Terminal Plating	Terminal Material	No of Terminals
None	0-4mm +/-0.1	4-16mm +/-0.2	16-60mm +/-0.3	100% Sn	CP Wire	14

Molding Material	UL File No.	Rating	Class
FR530	E41938	UL94-V0	N

Bobbin Part Number	Rev No
B-EE20H-14-1-PET	1

LODESTONE PACIFIC
NJD
CHINA FACTORY
www.lodestonepacific.com